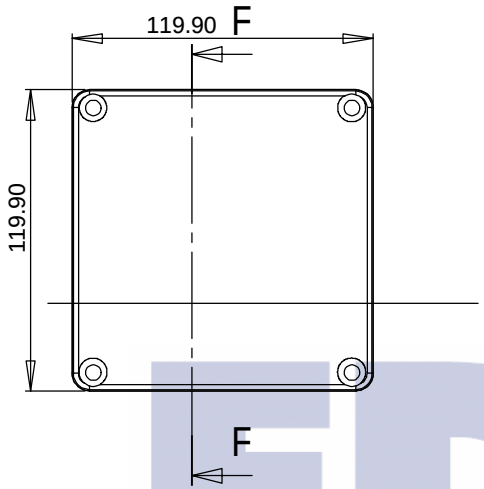

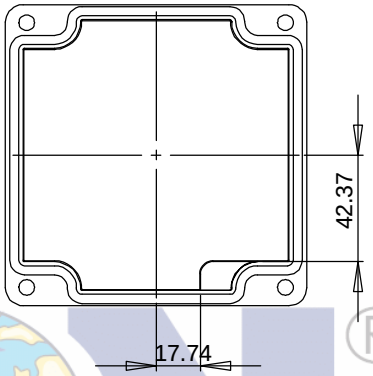

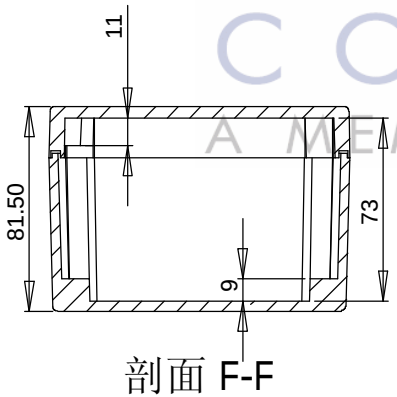

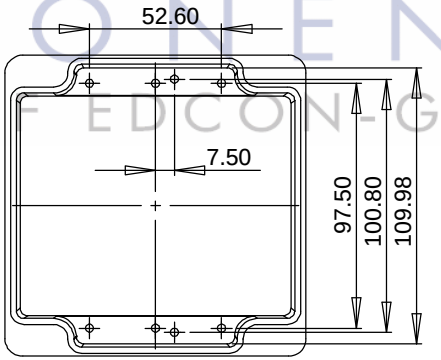

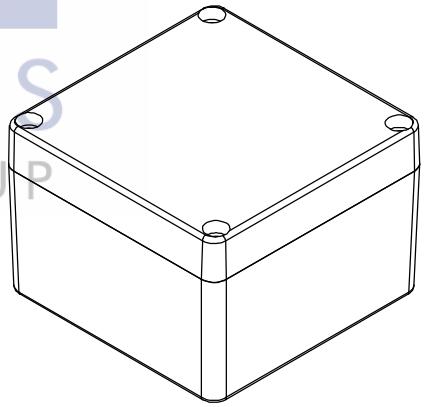

EDCON®
COMPONENTS
A MEMBER OF EDCON-GROUP

03-14