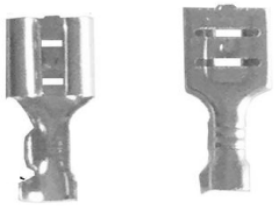

EDCON COMPONENTS
A MEMBER OF EDCON-GROUP

Technical Specification

Maximum Electrical Ratings:	600V
Maximum Electrical Ratings:	0,75-1,0mm² 16A
	0,75-2,5mm² 19A
Terminal Body:	Brass
Plating:	like ordering Information

Technical Drawing

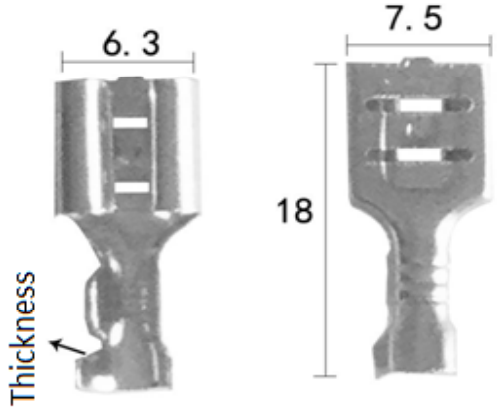

Dimension (mm)

Order Code	Tab (mm)	B	L	Thn.	Cable Size								Color
A0	6,3	7,5	18,0	0,3	0,5~1,0mm²								
A1	6,3	7,5	18,0	0,5	0,5~1,0mm²								
A2	6,3	7,5	18,0	0,8	0,5~1,0mm²								
A3	6,3	7,5	18,0	0,3	1,0~2,5mm²								
A4	6,3	7,5	18,0	0,5	1,0~2,5mm²								
A5	6,3	7,5	18,0	0,8	1,0~2,5mm²								
A6													
A7													
A8													
A9													
B0													
B1													
B2													
B3													
B4													

Ordering Information

Serie		Order Code	Surface	ROHS	Packing		
N38082	-	**A0**	**TN**	**R**	**TR**		

look table	**TN** Tinned	**R**= ROHS conform	**BU** Bulk-Ware into poly bag
	BR Material Colour	**N**= Non ROHS conform	**TR** Tape/Reel

Uninsulated joint female Terminal

Part No.: **N38082**

Customer:

DRW:	Jason	CHKD	Jules	MATL:	Wu	DATE	04.02.2021
APPD:	Join			FINISH	Shieh	Sheet	1 from 1

Copyright by S.Tiede

www.edcon-components.com
email: info@edcon-components.com