Drawing

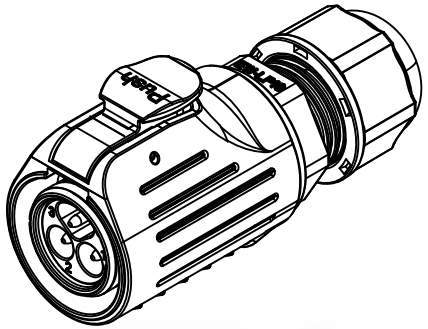

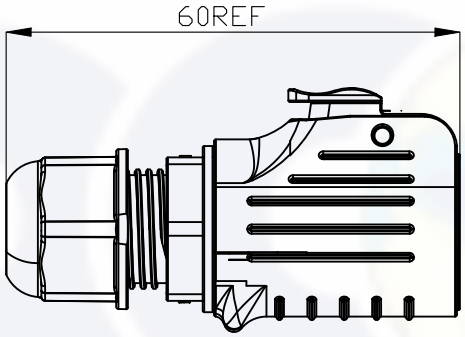

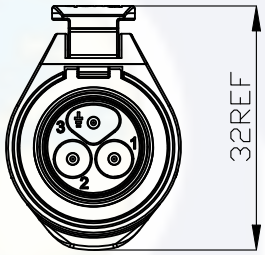

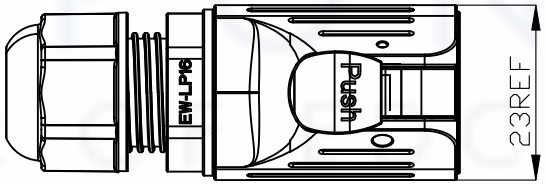

Date Sheet:

1. Raw Material:PBT Plastic Material
2. IP Code:IP67(Optional IP68 1m/2H)
3. Rated Current: 10A
4. Operating Voltage: AC 400V
5. Puncture Test: AC 2500V
6. Flame Retardant Grade: UL94 V-0
7. Wire Section: 1.5mm²/16AWG
8. Temperature Range: -40～+85℃
9. Certifications: UL/TUV/RoHS/CE
10. Outer Cable Diameter(OD):Ø4-9mm
11. Mating Cycles:≥1900
12. Pins: 3Pins

					Unspecified tolerance		unit	Ratio	page	version	Item number	T95A2002-RBU	designer	CBT	2023.7.27
					XX. ±0.50	XX.° ±3°	mm	1:1	1/1	A1	Name	T95A2002-3P Male part	proofreader	FWJ	2023.7.27
					X. ±0.3	X.° ±2°							Audit		
					.X ±0.20	.X° ±1°									
Mark	ECN#	Change Description	Signed	Date	.XX ±0.15								Approved		